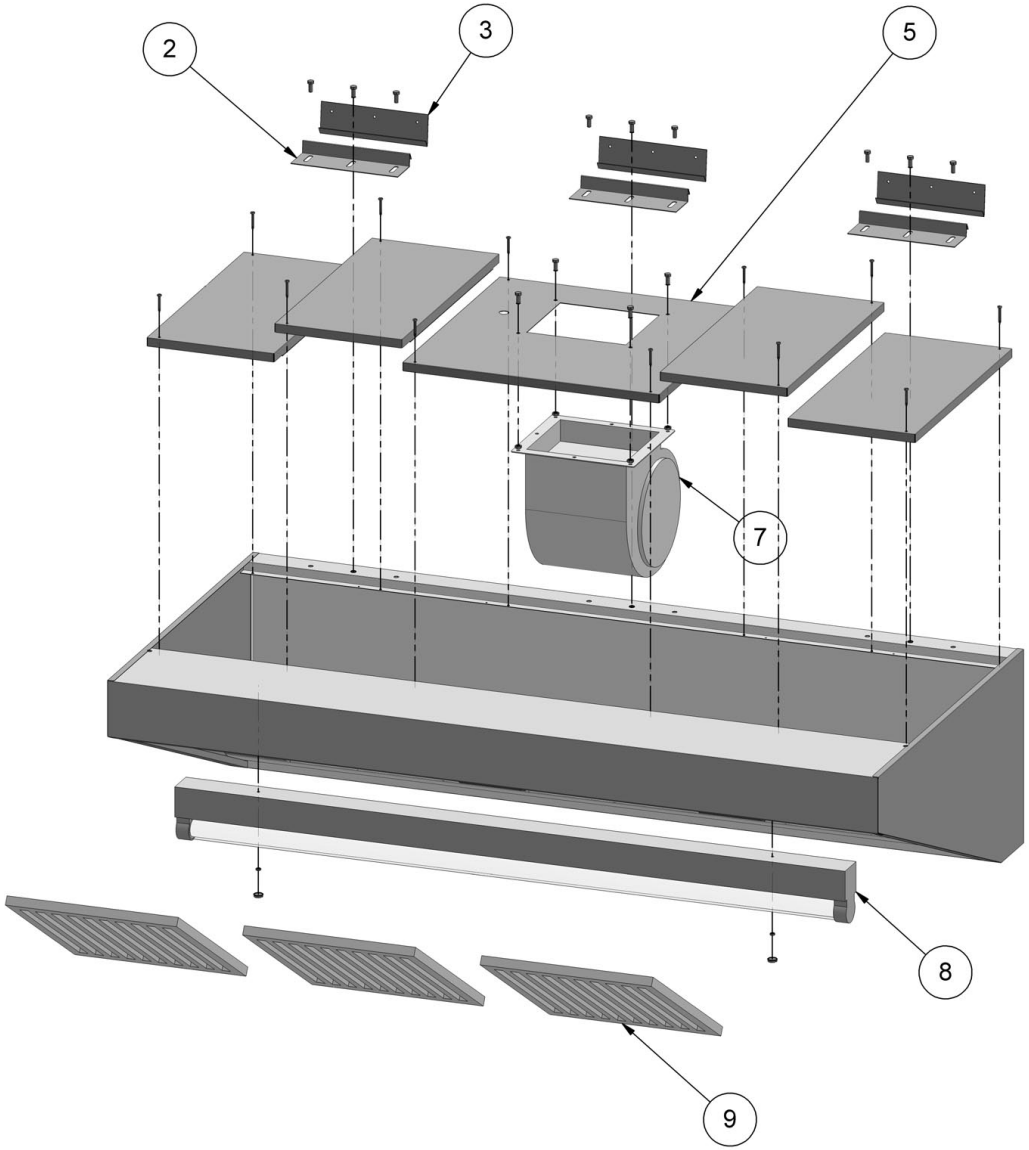

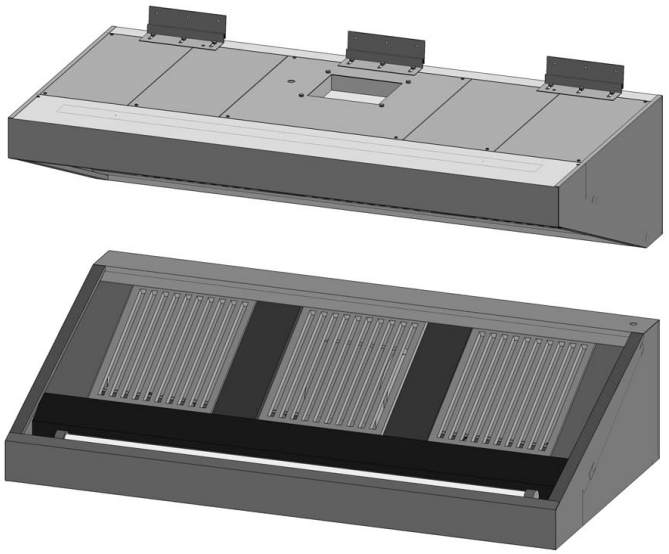

Bartscher

Wandhaube 900
Artikel-Nr.: 264130 - 264260,
265100 - 265280

Explosionszeichnung
31.03.2014

Pos.	Gerätenr.	Artikelbeschreibung	Description of item	Artikel Nr./Item No.
2		Halterung z. Haube	Bracket f. hood	010100
3		Wandhaltung	Wall bracket	020100
5		Halterung z. Motor (Haube mit Motor)	Bracket f. motor (Hood with motor)	E0110060
		Halterung (Haube ohne Motor)	Bracket (Hood without motor)	E0130060
7		Motor 200 W	Motor 200 W	020177
		Motor 420 W	Motor 420 W	E020199
8	264130	Lampe 600mm 1 x 18 Watt	Lamp 600mm 1 x 18 Watt	E0KLV18H50
	264140	Lampe 600mm 1 x 18 Watt	Lamp 600mm 1 x 18 Watt	E0KLV18H50
	264150	Lampe 600mm 1 x 18 Watt	Lamp 600mm 1 x 18 Watt	E0KLV18H50
	264160	Lampe 1200mm 1 x 25 Watt	Lamp 1200mm 1 x 25 Watt	E0KLV36H50
	264170	Lampe 1200mm 1 x 25 Watt	Lamp 1200mm 1 x 25 Watt	E0KLV36H50
	264180	Lampe 1200mm 1 x 25 Watt	Lamp 1200mm 1 x 25 Watt	E0KLV36H50
	264200	Lampe 1200mm 1 x 25 Watt	Lamp 1200mm 1 x 25 Watt	E0KLV36H50
	264220	Lampe 1600mm 1 x 58 Watt	Lamp 1600mm 1 x 58 Watt	E0KLV58H50
	265100	Lampe 600mm 1 x 18 Watt	Lamp 600mm 1 x 18 Watt	E0KLV18H50
	265120	Lampe 600mm 1 x 18 Watt	Lamp 600mm 1 x 18 Watt	E0KLV18H50
	265140	Lampe 600mm 1 x 18 Watt	Lamp 600mm 1 x 18 Watt	E0KLV18H50
	265150	Lampe 1200mm 1 x 25 Watt	Lamp 1200mm 1 x 25 Watt	E0KLV36H50
	265180	Lampe 1200mm 1 x 25 Watt	Lamp 1200mm 1 x 25 Watt	E0KLV36H50
	265200	Lampe 1200mm 1 x 25 Watt	Lamp 1200mm 1 x 25 Watt	E0KLV36H50
	268220	Lampe 1600mm 1 x 58 Watt	Lamp 1600mm 1 x 58 Watt	E0KLV58H50
9		Filter	Filter	020405
o.Abb./n. pic		Fettablasshahn	Grease drain cock	030100