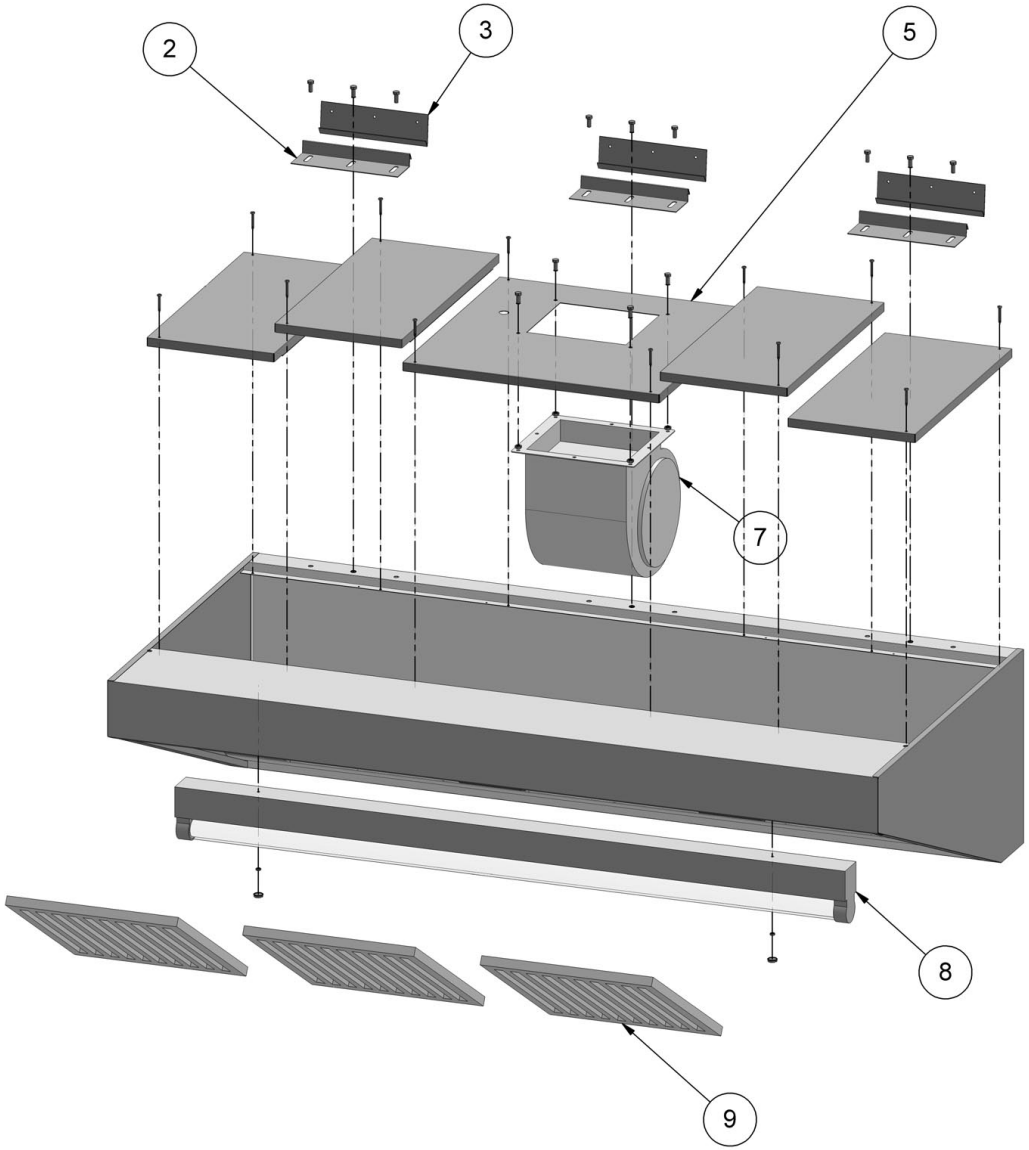


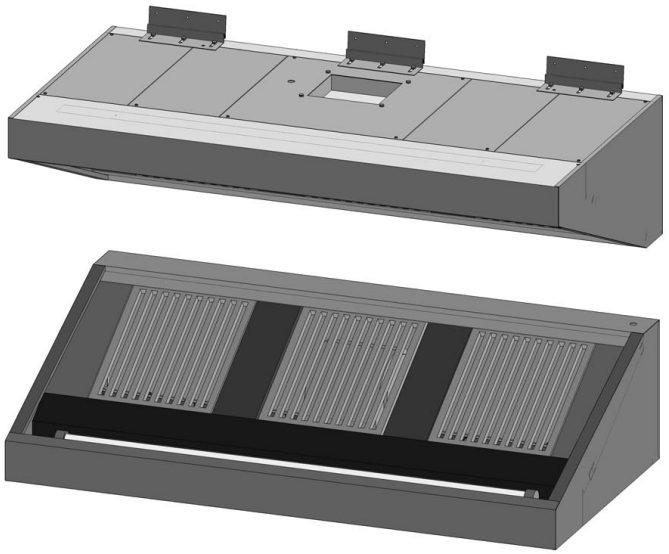

Bartscher

Wandhaube 900
Artikel-Nr.: 264130 - 264260,
265100 - 265280

Explosionszeichnung
31.03.2014

| Pos. | Gerätenr. | Artikelbeschreibung | Description of item | Artikel Nr./Item No. |
|---|---|---|---|---|
| 2 | | Halterung z. Haube | Bracket f. hood | 010100 |
| 3 | | Wandhaltung | Wall bracket | 020100 |
| 5 | | Halterung z. Motor (Haube mit Motor) | Bracket f. motor (Hood with motor) | E0110060 |
| | | Halterung (Haube ohne Motor) | Bracket (Hood without motor) | E0130060 |
| 7 | | Motor 200 W | Motor 200 W | 020177 |
| | | Motor 420 W | Motor 420 W | E020199 |
| 8 | 264130 | Lampe 600mm 1 x 18 Watt | Lamp 600mm 1 x 18 Watt | E0KLV18H50 |
| | 264140 | Lampe 600mm 1 x 18 Watt | Lamp 600mm 1 x 18 Watt | E0KLV18H50 |
| | 264150 | Lampe 600mm 1 x 18 Watt | Lamp 600mm 1 x 18 Watt | E0KLV18H50 |
| | 264160 | Lampe 1200mm 1 x 25 Watt | Lamp 1200mm 1 x 25 Watt | E0KLV36H50 |
| | 264170 | Lampe 1200mm 1 x 25 Watt | Lamp 1200mm 1 x 25 Watt | E0KLV36H50 |
| | 264180 | Lampe 1200mm 1 x 25 Watt | Lamp 1200mm 1 x 25 Watt | E0KLV36H50 |
| | 264200 | Lampe 1200mm 1 x 25 Watt | Lamp 1200mm 1 x 25 Watt | E0KLV36H50 |
| | 264220 | Lampe 1600mm 1 x 58 Watt | Lamp 1600mm 1 x 58 Watt | E0KLV58H50 |
| | 265100 | Lampe 600mm 1 x 18 Watt | Lamp 600mm 1 x 18 Watt | E0KLV18H50 |
| | 265120 | Lampe 600mm 1 x 18 Watt | Lamp 600mm 1 x 18 Watt | E0KLV18H50 |
| | 265140 | Lampe 600mm 1 x 18 Watt | Lamp 600mm 1 x 18 Watt | E0KLV18H50 |
| | 265150 | Lampe 1200mm 1 x 25 Watt | Lamp 1200mm 1 x 25 Watt | E0KLV36H50 |
| | 265180 | Lampe 1200mm 1 x 25 Watt | Lamp 1200mm 1 x 25 Watt | E0KLV36H50 |
| | 265200 | Lampe 1200mm 1 x 25 Watt | Lamp 1200mm 1 x 25 Watt | E0KLV36H50 |
| | 268220 | Lampe 1600mm 1 x 58 Watt | Lamp 1600mm 1 x 58 Watt | E0KLV58H50 |
| 9 | | Filter | Filter | 020405 |
| o.Abb./n. pic | | Fettablasshahn | Grease drain cock | 030100 |