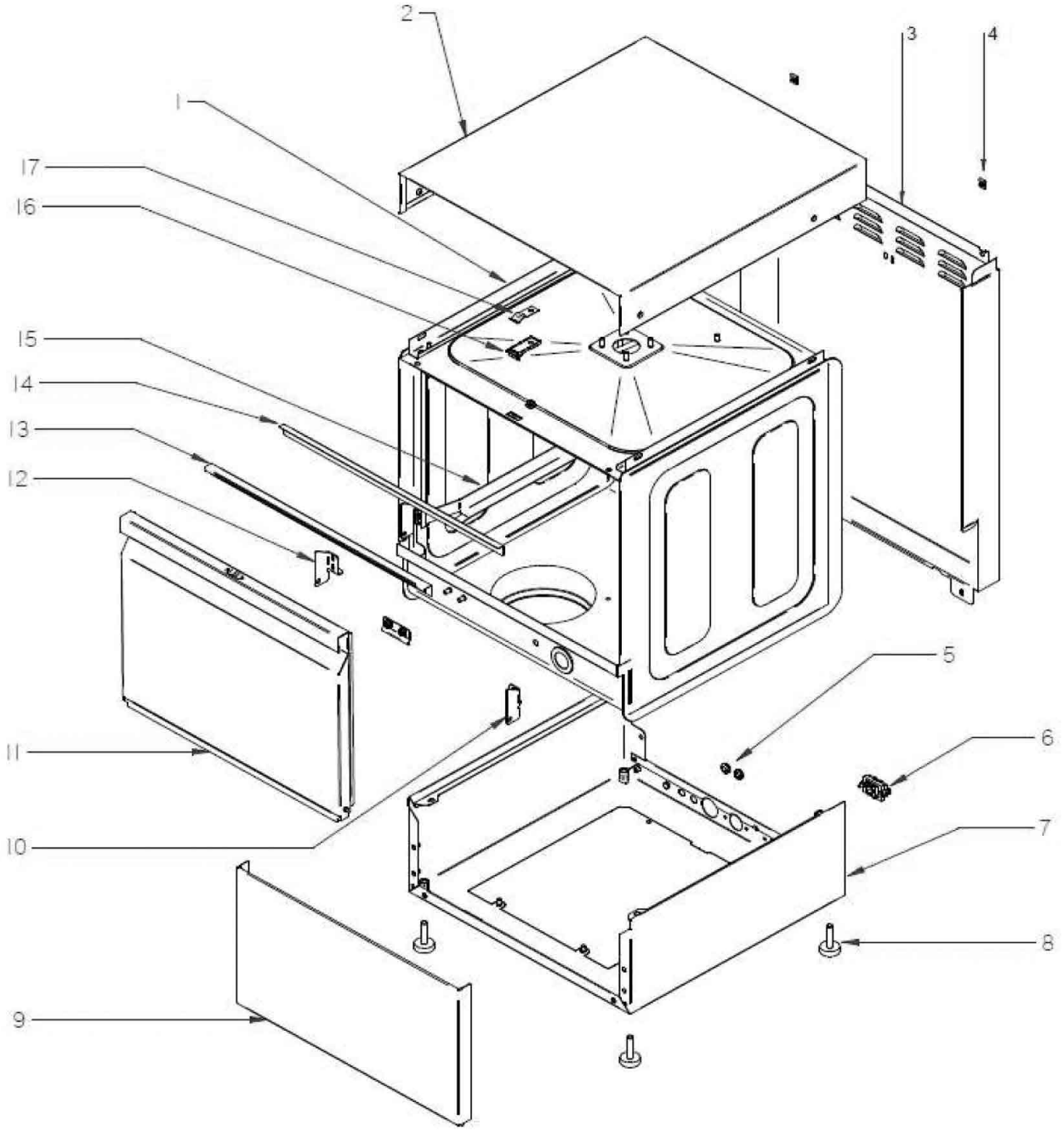
2
3
4
1
17
16
15
14
13
12
5
6
11
7
10
8
9

| Pos. | Artikelbeschreibung | Description of item | Artikel Nr./Item No. |
|---|---|---|---|
| 1 | Halterung | Lid holder 400 | E012170256 |
| 2 | Gehäusedeckel | GW-400 Lid | E012140262 |
| 3 | Mutter | M-5 FAST Nut | E012010134 |
| 4 | Rückwand | GW-400 Back panel | E012140261 |
| 5 | Gummidurchführung | Rubber conduit protector | E012037842 |
| 6 | Kabelhalterung | Cable holder | E012024230 |
| 7 | Gehäuse unten | Complete GW-400 base | E012140269 |
| 8 | Fuß, höhenverstellbar | Foot, height-adjustable | E012024163 |
| 9 | Blende unten | Front butom panel | E012140260 |
| 10 | Türscharnier rechts | Door right support | E012271860 |
| 12 | Halterung | Bracket | E012048627 |
| 12 | Türscharnier links | Door left support | E012271839 |
| 13 | Dichtung | Door gasket profile 400 | E012102035 |
| 14 | Dichtung | Door gasket 400 | E012101867 |
| 15 | Korbführung rechts | Right gasket guide 400 | E012102194 |
| S/Nº | Korbführung links | Left gasket guide 400 | E012102193 |
| 16 | Türstopper | Door plastik blocker | E012087183 |
| 17 | Schließfeder | Door closing springe plate | E012087186 |

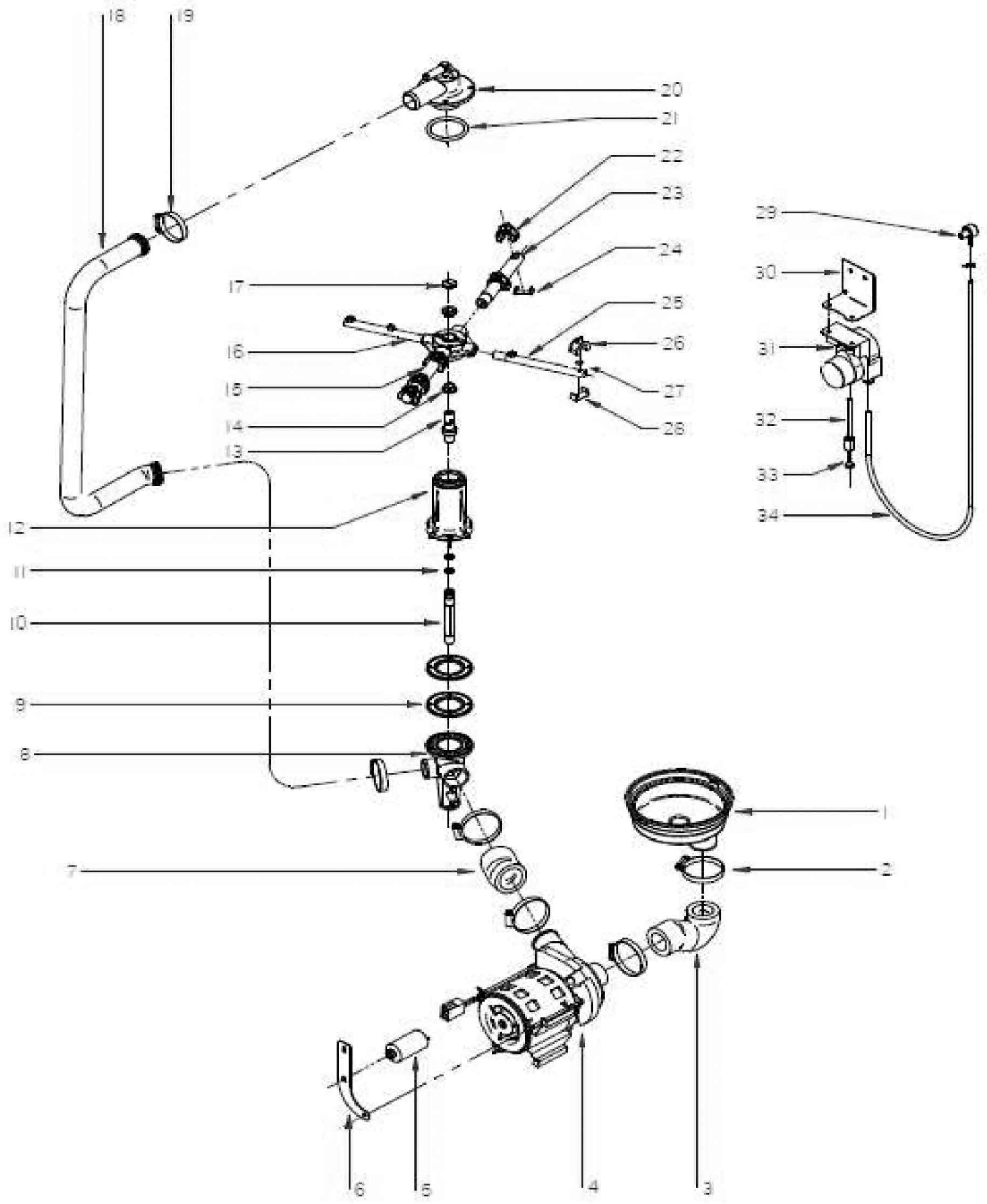
18
19
20
21
22
23
24
25
26
27
28
29
30
31
32
33
34
17
16
15
14
13
12
11
10
9
8
7
1
2
6
5
4
3

| Pos. | Artikelbeschreibung | Description of item | Artikel Nr./Item No. |
|---|---|---|---|
| 1 | Pumpensumpf | Drainage bowl GW | E012023617 |
| S/N | Schelle | Drain bowl clamp | E012025195 |
| 2 | Anschlußklemme | Clamp 32-50 | E012009986 |
| 3 | Ansaugschlauch | Wash Pump Inlet Pipe GW | E012023670 |
| 4 | Spülpumpe 260W | Washig 50/60Hz 260 W | E012023429 |
| 5 | Kondensator 6mf | 6MF Capacitor | E012024346 |
| 6 | Waschpumpe | Washing pump | E012139529 |
| 7 | Druckschlauch | Wash Pump Outlet Pipe GW | E012023607 |
| 8 | Spülwasserverteiler unten | Lower Outer Feedthrough GW | E012024703 |
| 9 | Dichtung | Bottom Feedthrough Gasket GW | E012023533 |
| 10 | Anschlussrohr | Rinsing Connector | E012023801 |
| 11 | O-ring10,82x14,38x1,78 | O-ring10,82x14,38x1,78 | E012009911 |
| 12 | Fuß zum Spülarm | Botton Feedthrough GW | E012025133 |
| 13 | Spülarmnase | Arm rotation central shaft GW | E012025114 |
| 14 | Gleitring | Arm holder sleeve GW | E012024086 |
| 15 | Spülarm mit innenliegenden Düsen | Plastic washing branch A 350 | E012024138 |
| 16 | Nachspülarm mit außenliegnden Düsen | Plastic rinsing branch A 350 | E012025253 |
| 17 | Bolzen M5 x 0,8 | Bolt M5 x 0.8 | E012009829 |
| 18 | Steigrohr | Washing tree 350 | E012024059 |
| 19 | Schelle 25/40 | Bracket 25/40 | E012009997 |
| 20 | Spülwasserverteiler oben | Upper Feedthrough GW | E012023590 |
| 21 | O-Ring 50,17 x 60,83 x 5,3 | O-ring 50.17 x 60.83 x 5.3 | E012010079 |
| 22 | Spüldüse | Washing Nozzle | E012023732 |
| 23 | Spülarm mit außenliegenden Düsen | Plastic washing branch A 350 | E012025251 |
| 24 | Klammer | Washing nozzle holder | E012023710 |
| 25 | Spülstutzen Kunststoff | Plastic rinsing branch A 350 | E012024137 |
| 26 | Nachspüldüse | Rinse nozzle | E012024077 |
| 27 | O-Ring 5,28 x 8,84 x 1,78 | O-ring 5.28 x 8.84 x 1.78 | E012009912 |
| 28 | Klammer | Clamp | E012024006 |
| | Waschmittelspender | Set dispensador detergente LVS | E012182946 |
| 29 | Buchse | Socket | E012024531 |
| 30 | Halterung | Dispenser holder | E012140258 |
| 31 | Reinigerdosierpumpe | Detergent dosing pump | E012133011 |
| 32 | Zuleitung | Supply line | E012024139 |
| 33 | Gewicht z. Filter | Weight f. filter | E012164632 |
| 34 | Schlauch | Hose | E011000079 |

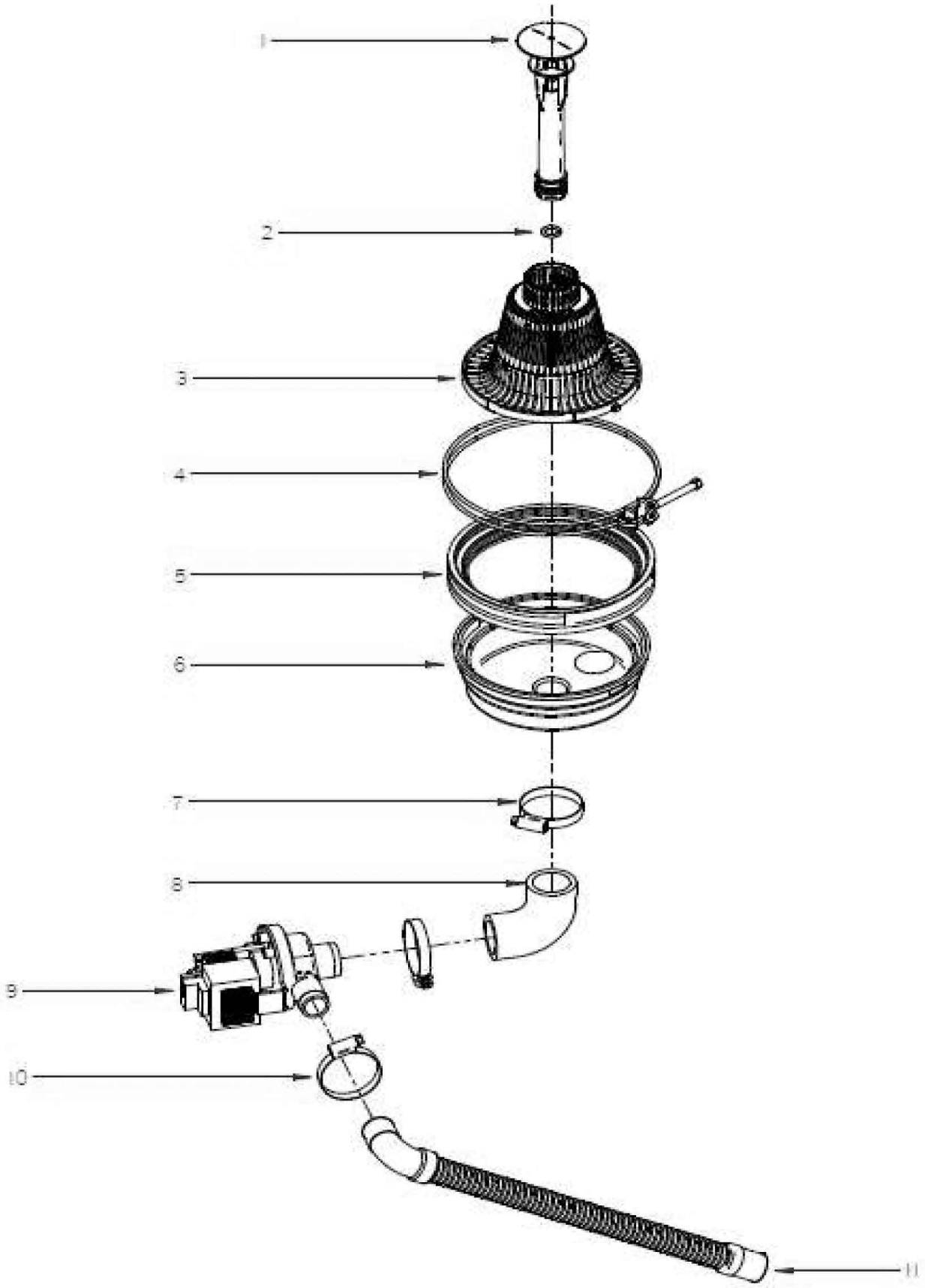
1
2
3
4
5
6
7
8
9
10
11

| Pos. | Artikelbeschreibung | Description of item | Artikel Nr./Item No. |
|---|---|---|---|
| 1 | Standrohr | Overflow cork GE Mod. B | E012133299 |
| 2 | O-Ring 25,2x19,2x23 | O-Ring 25,2x19,2x23 | E012104085 |
| 3 | Ablaufsieb | Drain bowl filter | E012092003 |
| 4 | Schelle | Drain bowl clamp | E012025195 |
| 5 | Dichtung | Drain bowl gasket | E012024113 |
| 6 | Pumpensumpf | Drainage bowl GW | E012023617 |
| 7 | Schelle 25/40 | Bracket 25/40 | E012009997 |
| 8 | Pumpenanschlussschlauch | Pump inlet pipe | E012041928 |
| 9 | Pumpe 220V AC 1N | Pump 37kW, 220V AC 1N | E012094265 |
| 10 | Anschlußklemme | Clamp 20-32 | E012010023 |
| 11 | Ablaufschlauch | Drain pipe | E012023666 |

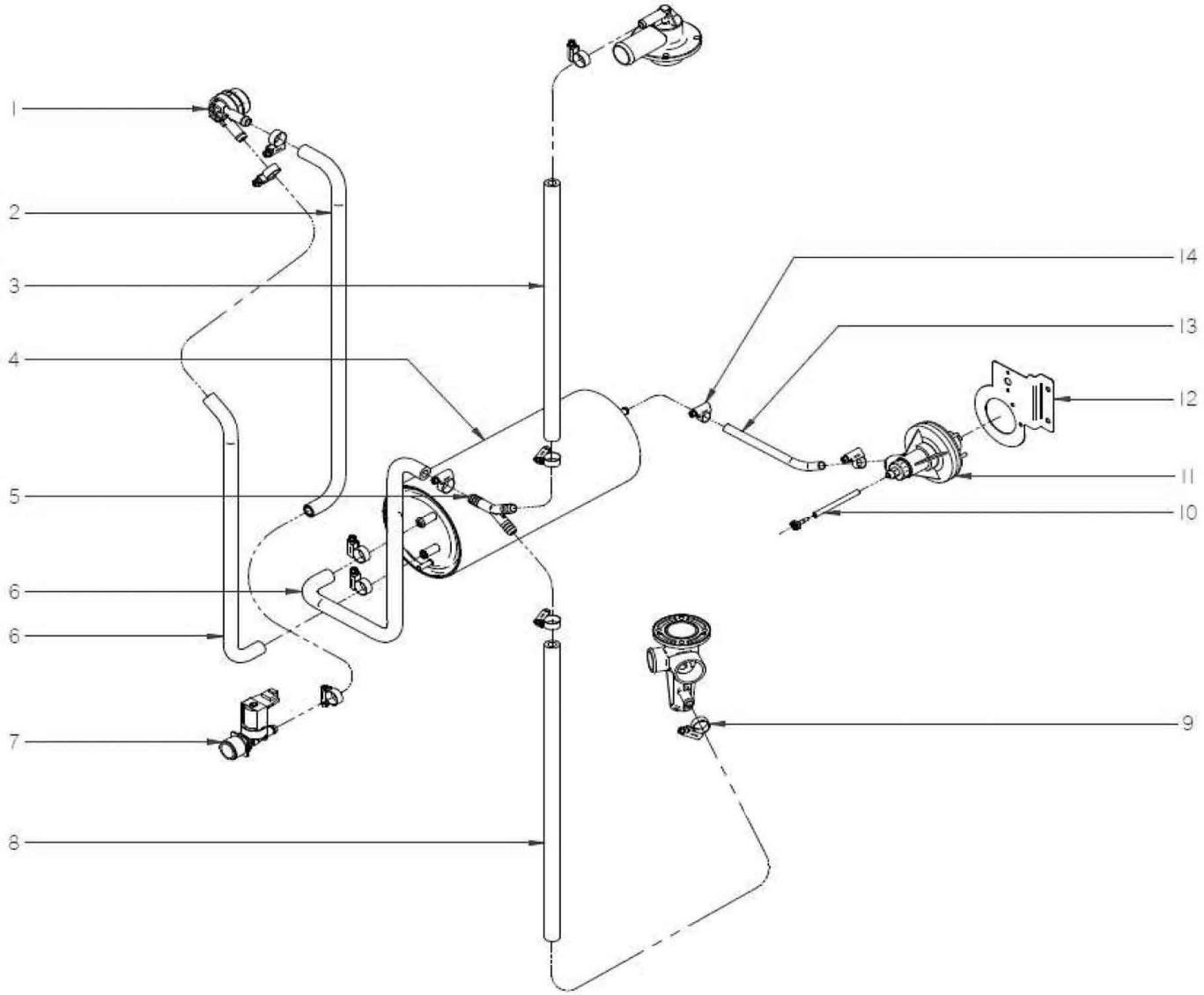
1
2
3
4
5
6
6
7
8
9
10
11
12
13
14

| Pos. | Artikelbeschreibung | Description of item | Artikel Nr./Item No. |
|---|---|---|---|
| 1 | Rückschlagventil | Non-return valve | E012024568 |
| 2 | Schlauch | Non-return valve hose | E012093403 |
| 4 | Boiler | GW Boiler | E012139525 |
| 5 | Y Stück | Cross fitting | E012024192 |
| 6 | Schlauch | Boiler fitting pipe | E012093329 |
| 7 | Wassereinlassmagnetventil | 2 Way electrovalve | E012023794 |
| 9 | Schelle 12/20 | Bracket 12/20 | E012010036 |
| 10 | Zuleitung | Supply line | E012024139 |
| 11 | Klarspülmitteldosierpumpe | Rinse aid dosing pump | E012133010 |
| 12 | Halterung | Dispenser holder GW-350 | E012139530 |
| 13 | Schlauch | Dispenser-Boiler hose | E012149969 |
| 14 | Schelle 8-14L | Bracket 8-14L | E012010047 |

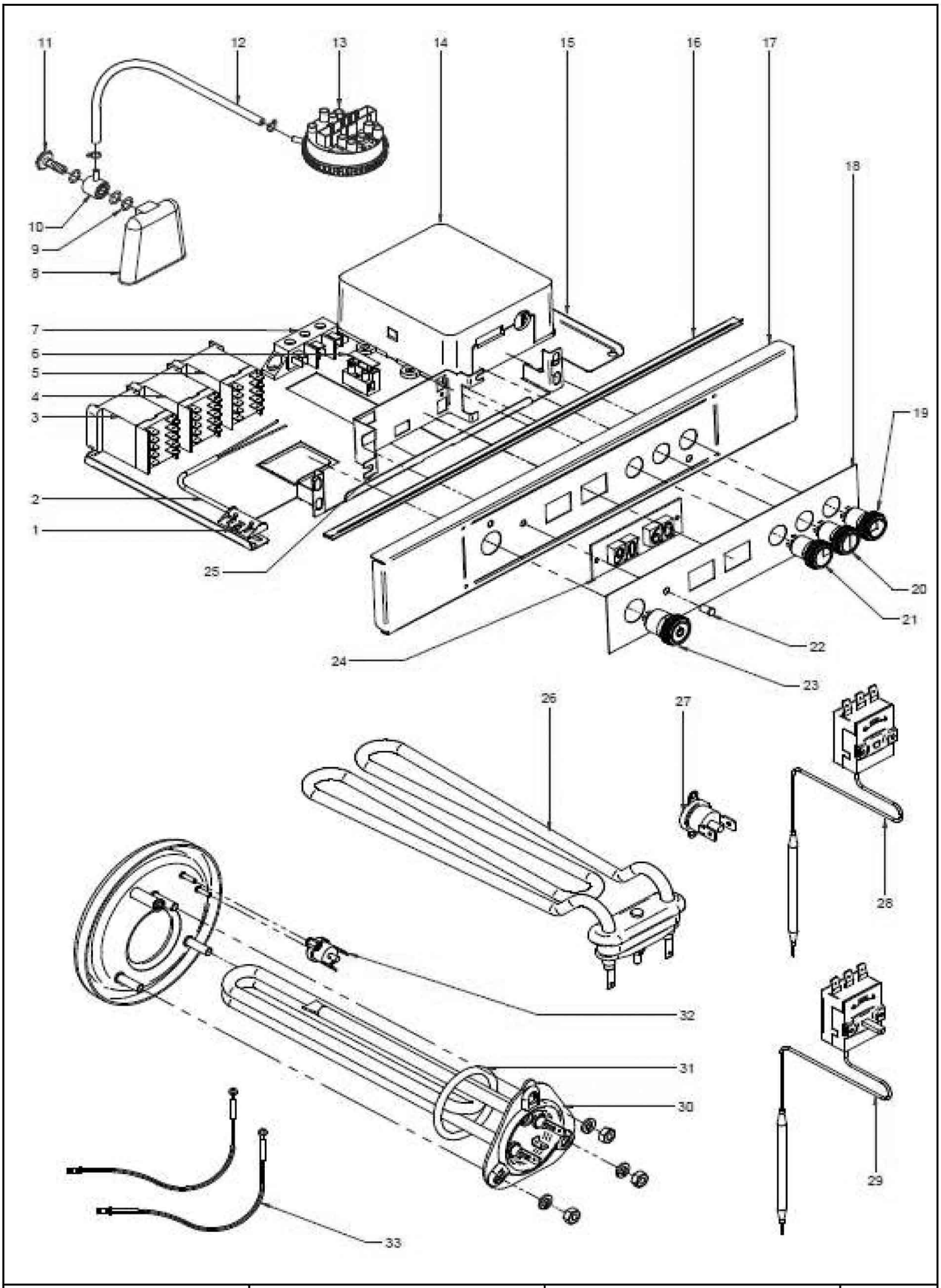


| | | | |
|---|---|---|---|
| Bartscher | Spülmaschine GS E400 LPR K<br>Artikel-Nr.: 110400 | Explosionszeichnung<br>Datum 25.05.2023 | Seite 9/10 |

| Pos. | Artikelbeschreibung | Description of item | Artikel Nr./Item No. |
|---|---|---|---|
| 1 | Halterung z. Magnetschalter | Magnetic switch holder | E012024066 |
| 2 | Magnetschalter | Magnetic switch | E012024477 |
| 3 | Relais 230V, 16A, 50/60Hz | Relay 230V, 16A, 50/60Hz | E012023706 |
| 4 | Schütz 230V, 50/60Hz, 16A | Contact 230V, 50/60Hz, 16A | E012024011 |
| 5 | Schütz 230V, 50/60Hz, 16A | Contact 230V, 50/60Hz, 16A | E012024011 |
| 6 | Anschlussklemme, 3-polig, 40A | Terminal clamp, 3-pole, 40A | E012024382 |
| 7 | Sicherung 10A | Fuse 10A | E012024153 |
| S/Nº | Halterung | Holder | E012045569 |
| 8 | Luftfalle | Air trap assembly | E012024350 |
| 9 | O-Ring 16,01 x 10,77 x 2,62 | O-ring 16.01 x 10.77 x 2.62 | E012009873 |
| 10 | Verbindung | Connector | E012024157 |
| 11 | Schraube | Screw | E012024222 |
| 12 | Schlauch D8 x 4 | Hose D8 x 4 | E011000066 |
| S/Nº | Schlauchschelle | Hose clamp | E012023707 |
| 13 | Pressostat 1,3-2,8 bar | 1.3-2.8 bar Simple presostat | E012023803 |
| 14 | Platine 230V, 50/60 AC | Circuit board 230V, 50/60 AC | E012008750 |
| 14 | Steuerung | electronic control card | E012188923 |
| 15 | Halteblech | Electric component base | E012223608 |
| 16 | Dichtung | GW-400 Lid sealing profile | E012169876 |
| 19 | Druckknopf, Spülzyklus 60s | Push button, rinsing cycle 60s | E012183262 |
| 20 | Druckknopf, Spülzyklus 90s | Push button, rinsing cycle 90s | E012171806 |
| 21 | Druckknopf, Spülzyklus 180s | Push button, rinsing cycle 180s | E012171805 |
| 23 | Schalter ein/aus | Switch on/off | E012141804 |
| 24 | Halterung | Holder | E012022219 |
| 25 | Temperaturanzeige | Temperature display | E012024028 |
| 26 | Tankheizkörper 2 kW | Container heater 2 kW | E012090524 |
| 27 | Sicherheitsthermostat Tank | Safety thermostat tank | E012090518 |
| 28 | Thermostat 60°C | Thermostat 60°C | E012161299 |
| 29 | Thermostat | Thermostat | E012046152 |
| 30 | Heizkörper 2,8 kW | Boiler heater 2.8 kW | E012093124 |
| 31 | O-Ring 62,87x73,53x5,33 | O-ring 62,87x73,53x5,33 | E012102062 |
| 32 | Sicherheitsthermostat | Safety thermostat | E012096597 |
| 33 | Temperaturfühler | Temperature sensor | E012025036 |
| S/Nº | Halterung z. Temepraturfühler | Holder f. temperature sensor | E012023142 |